Spare parts catalogue, Reservdelskatalog, Ersatzteilkatalog, Catalogue de piéces de rechange, Varaosaluettelo, Catalogue de piezas de recambio, Каталог запасных частеи, Catalogo parti di ricambio, Reservedelskatalog, Catalogo de pecas sobressalentes, Καταλογοσ ανταλλακτικων, Reserveonderdelen-catalogus

P 635

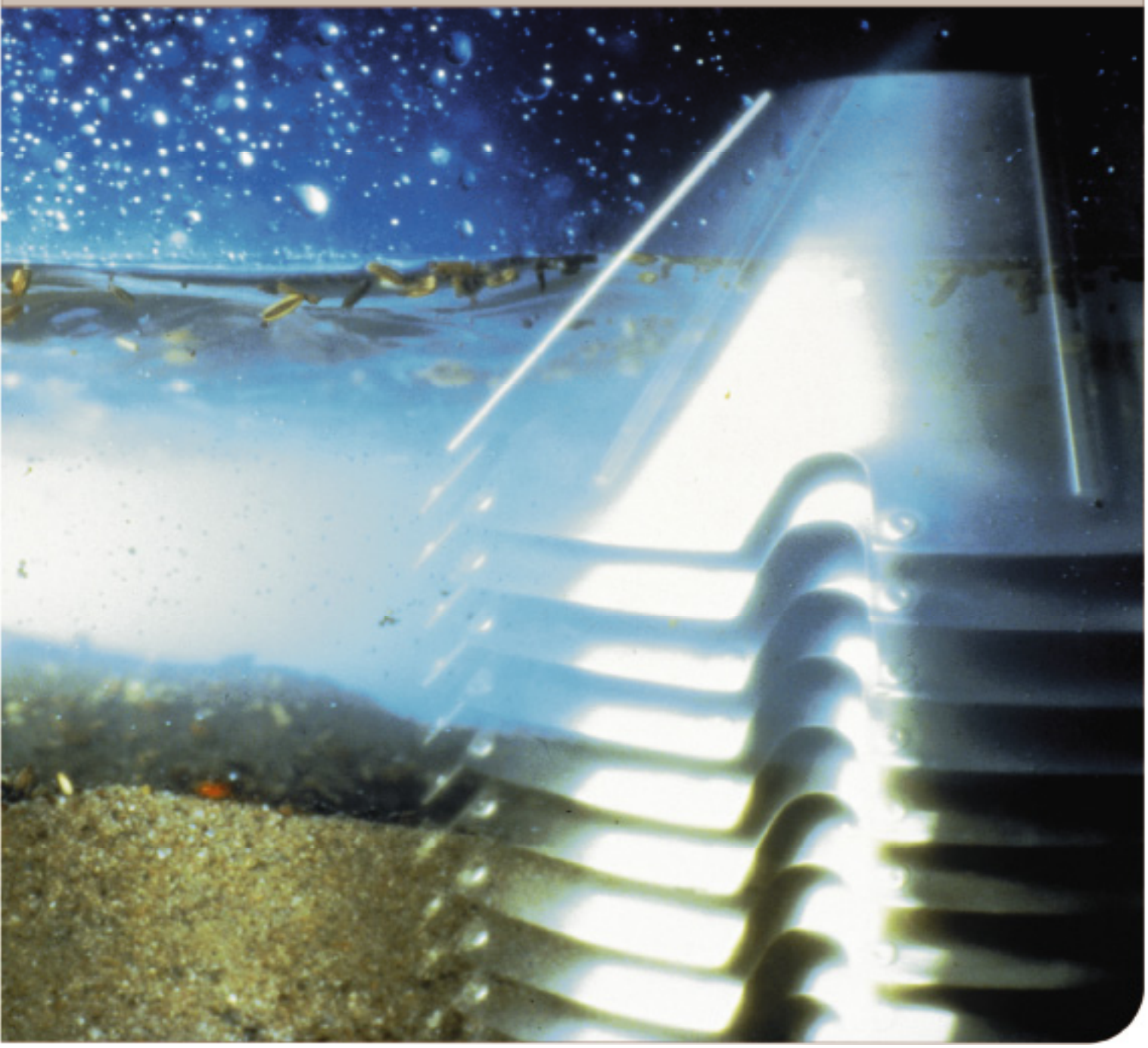

Specification No. 881202-07-01/3
Book No. 578547 02 Rev. 9

Published By:
Alfa Laval Tumba AB
SE-147 80 Tumba, Sweden

Telephone: +46 8 530 650 00
Telefax: +46 8 530 310 40

© Alfa Laval Tumba AB 2010-04-26

Original instructions

This publication or any part there of may not be reproduced or transmitted by any process or means without prior written permission of Alfa Laval Tumba AB.

Contents

1 Read this first 5
1.1 General information 6
1.2 Translation list 9
2 Machine bottom part 12
2.1 Driving device vertical 14
3 Separator bowl 16
4 Inlet and outlet device 18
5 Belt driving device 20
5.1 Centrifugal clutch 22
6 Set of plates 24
7 Speed sensor kit 26
8 Monitoring kit 28
9 Cover interlocking kit 30
10 Junction box kit 32
11 Set of tools 34
11.1 Hydraulic tool kit 36
12 Inspection kit 42
13 Overhaul kit 44
14 Support kit 46

15 Lifting tool 48

16 Tool box 50

17 Cross reference list 52

1 Read this first

en Check the machine unit number on the name-plate before using this catalogue

sv Kontrollera maskinenhetens nummer på maskinskylten innan du använder katalogen

de Das Typenschild - ein Hinweis zur korrekten Ersatzteilnummer

fr La plaque de la machine, un guide pour trouver le numéro de piéce de rechange correct

es La placa-marca de la máquina - guía del número correcto del repuesto

ru Фирменная табличка машины — указатель правилного номера запасной части

it La targhetta della macchina - guida al corretto numero dei ricambi

pt La placa do fabricante da máquina - um guia do número correto das partes sobressalentes

fi Konekilpi - opastin oikeaan varaosanumeroon

el Η πινακίδα της μηχανής είναι ο οδηγός του σωστού ανταλλακτικού

nl Het gegevensplaatje - een wegwijzer naar het juiste onderdeelnummer

da Typeskiltet - en guide til det rette reservedelsnummer

1.1 General information

en

Safeguard your commitment to quality by always using genuine Alfa Laval spare parts.

Remember, Alfa Laval cannot accept responsibility for the failure of a separator equipped with non-original spare parts. We guarantee the quality and reliability of our products.

sv

Följ ditt kvalitetstänkande genom att endast använda Alfa Laval originalreservdelar.

Kom ihåg att Alfa Laval inte tar något ansvar för fel på en separator, som innehåller icke-originaldelar. Vi garanterar kvaliteten och driftsäkerheten endast hos våra egna produkter.

de

Aus Rücksicht auf Ihr Bestreben um beste Qualität sollten Sie nur Alfa Laval Originalersatzteile benutzen.

Vergessen Sie nicht, Alfa Laval kann keine Verantwortung für das Versagen eines Separators übernehmen, der nicht mit Originalersatzteilen versehen ist. Wir garantieren Qualität und Zuverlässigkeit unserer Produkte.

fr

Préservez la qualité de vos équipments en n‘employant que des pièces de rechange Alfa Laval.

N’oubliez pas q’Alfa Laval décline toute responsabilité en cas de panne d’un séparateur non équipé de pièces de rechange d’origine. Nous garantissons la qualité et la fiabilité de nos produits.

es

Mantenga su compromiso con la calidad, al usar siempre piezas de repuesto Alfa Laval auténticas.

Recuerde que Alfa Laval no acepta responsabilidad por el fallo de una separadora equipada con piezas de repuesto no originales. Garantizamos la calidad y fiabilidad de nuestros productos.

ru

Гарантируйте надежность качества всегда используя подлинные запасные части фирмы Alfa Laval.

Запомните, что Alfa Laval не несет ответственности за повреждение сепаратора, оснащенного неподлинными запчастами. Мы гарантируем качестьо и надежность наших изделий.

it

Salvaguardate la vostra garanzia di qualità facendo sempre uso di parti di ricambio Alfa Laval autentiche.

Tenete presente che la Alfa Laval non può accettare responsabilità per avaria ad un separatore attrezzato con parti di ricambio non originali. Noi garantiamo la qualità l'affidabilità dei nostri prodotti.

pt

Proteja o seu cometimento a qualidade usando sempre peças sobressalentes genuinas Alfa Laval.

Não esqueça que Alfa Laval não aceita responsabilidade por falha de uma separadora equipada com peças sobressalentes não genuinas. Nós garantimos a qualidade e a confiança dos nossos produtos.

fi

Varmistakaa vastuunne laadusta käyttämällä aina alkuperäisiä Alfa Laval varaosia.

Muistakaa, Alfa Laval ei voi hyväksyä vastuuta ei-alkuperäsillä varaosilla varustetun separaattorin vaurioista. Me takaamme tuotteidemme laadun ja käyttövarmuuden.

el

Εξασφαλίοτε υψηλή ποιότητα χρησιμοποιώντας μόνο γνήσια ανταλλακτικά της Alfa Laval.

Έχετε υπόψην ότι η Alfa Laval δεν αναλαμβάνει καμμιά ευθύνη για βλάβες βουτυρομηχανής, οτην οποία έχουν εφαρμοστεί μή γνήσια ανταλλακτικά. Εγγυόμαστε ποιότητα και καλή λειτουργία μόνο για τα δικά μας προϊόντα.

nl

Streef naar een zo hoog mogelijke kwaliteit en gebruik uitsluitend originele Alfa Laval reserveonderdelen. Streef naar een zo hoog mogelijke kwaliteit en gebruik uitsluitend originele Alfa Laval reserveonderdelen.

Vergeet niet dat Alfa Laval niet verantwoordelijk is voor een defecte separator die niet-originele onderdelen bevat. Wij garanderen de kwaliteit en betrouwbaarheid van onze eigen produkten.

da

Hold Dem til den kvalitet, De har valgt at satse på, ved altid at anvende ægte Alfa Laval reservedele.

Husk, at Alfa Laval ikke kan påtage sig noget ansvar for fejl på en separator, som indeholder uoriginale dele. Vi kan kun garantere kvalitet og driftsikkerhed på vore egne produkter.

1.2 Translation list

Översättningslista
Übersetzungsliste
Liste de traduction
Lista de traducciones

en	sv	de	fr	es
Part no.	Reservdelsnummer	Teil-Nr.	Numéro de pièce	Pieza No.
Qty	Antal	Anzahl	Quantité	Cantidad
Description	Benämning	Bezeichnung	Dénomination	Descripción
Notes	Anmärkningar	Anmerkungen	Remarques	Notas
Machine type	Maskintyp	Maschinentyp	Type de machine	Tipo de máquina
Product no.	Produktnr	Produktnummer	Numéro de produit	Número de producto
Machine unit description	Maskinblocksbenämning	Bezeichnung des Maschinenblocks	Dénomination de partie de machine	Descripción de sección de la máquina
Machine unit no.	Maskinblocksnr	Maschinenblock Nr.	Partie de machine nº	No. de sección de máquina
Subassembly description	Undergruppsbenämning	Bezeichung der Untergruppe	Dénomination de sous-ensemble	Descripción de subconjunto
Subassembly no.	Undergruppsnr	Untergruppe Nr.	Nº de sous-ensemble	Número de subconjunto
See page	Se sidan	Siehe Seite	Vòir page	Véase la página
Fig. ref.	Figurhänvisning	Bildhinweise	Réf. de fig.	Referencia de figura
Product name	Produktnamn	Produktname	Nom du produit	Nombre del producto
Exchange necessitates rebalancing of bowl	Utbyte nödvändiggör ombalansering av kulan	Austausch erfordert Wiederauswuchtung der Trommel	Le remplacement nécessite le rééquilibrage du bol	El racmbio requiere el reequilibrado del rotor
See separate spare parts list	Se separat reservdelslista	Siehe separate Ersatzteilliste	Voir liste séparée des pièces de rechange	Véase la lista de piezas separada
Not delivered as spare part	Levereras ej som reservdel	Nicht als Ersatzteil geliefert	Non livré comme piéce de rechange	No se entrega como pieza de recambio

Словарь перевда
Lista traduzioni
Lista para tradução
Käännösluttelo

en	ru	it	pt	fi
Part no.	Деталь №	Nr. parte	Numero de peca	Varaosanumero
Qty	Кол—во	Quantita	Quantidade	Lukumäärä
Description	Наименование	Descrizione	Descricao	Nimitys
Notes	Примечания	Note	Notas	Huomautuksia
Machine type	Машина тнпа	Tipo macchina	Tipo de maquina	Konetyyppi
Product no.	Артикул №	Nr.prodotto	No. do produto	Tuotteen no
Machine unit description	Наименование блока машины	Descrizione unita macchina	Descricao da unidade da maquina	Koneenosan nimitys
Machine unit no.	Блок машины №	Nr. unita macchina	Numero de unidade da maquina	Koneenosan no
Subassembly description	Наименование группы	Descrizione sottogruppo	Descriao do subconjunto	Alaryhmän nimitys
Subassembly no.	Группа №	Nr. sottogruppo	Número de subconjunto	Alaryhmän no
See page	См. страницу	Vedi pagina	Véase la página	Ks sivu
Fig. ref.	Ссылка на зскиз	Rif. fig.	Referencia de figura	Kuvaviite
Product name	Наименование артикула	Nome prodotto	Nombre del producto	Tuotteen nimi
Exchange necessitates rebalancing of bowl	Замена требует балансировки барабана	La sostituzione comporta la equilibratura del tamburo	El racmbio requiere el reequilibrado del rotor	Vaihdettaessa kuula tasapainoitettava uudelleen
See separate spare parts list	См. отдельный перечень запасных частей	Vedi lista separata delle parti di ricambio	Véase la lista de piezas separada	Katso erillistä varaosaluetteloa
Not delivered as spare part	Не поставлена вместе с запасными частями	Non fornito come parte di ricambio	No se entrega como pieza de recambio	Ei toimiteta varaosana

ΓΛΩΣΣΑΡΙ
Vertaallijst
Oversættelseliste

en	el	nl	da
Part no.	Αριθμός ανταλλακτικού	Onderdeelnr.	Reservedelsnummer
Qty	Σύνολο	Hoeveelheid	Antal
Description	Περιγραφή	Beschrijving	Betegnelse
Notes	Παρατηρήσεις	Opmerkingen	Bemaerkninger
Machine type	Τύπος μηχανήματος	Machinetype	Maskintype
Product no.	Αριθμός προϊόντος	Produktnr.	Produktnr.
Machine unit description	Περιγραφή συγκροτήματος μηχανής	Machineblokbenaming	Maskinbetegnelse
Machine unit no.	Αριθμός συγκροτήματος μηχανής	Machineblokbenamning	Maskinnr.
Subassembly description	Περιγραφή υποσυγκροτήματος	Subgroepbenamning	Undergruppsbetegnelse
Subassembly no.	Αριθμός υποσυγκροτήματος	Subgroepnr.	Undergruppenr.
See page	Βλέπε σελίδα	Zie blz.	Se side
Fig. ref.	Παραπομπή σε εικόνα	Afb. ref.	Figurhenvisning
Product name	Ονομασία προϊόντος	Produktnaam	Produktnavn
Exchange necessitates rebalancing of bowl	Ανταλλαγή απαιτεί επαναρρύθμιση ισορροπίας του τύμπανου	Vervangning vereist herbalanceren van de kogel	Udskriftning kraever afbalcering af kuglen
See separate spare parts list	Βλέπε ειδική λίστα ανταλλακτικών	Vervangning vereist van de kogel	Se spaat reservedelsliste
Not delivered as spare part	Δεν παραδίδεται ως ανταλλακτικό	Niet geleverd als reserveonderdeel	Levereres ikke som reservedel

2 Machine bottom part

Ref	Part No	Description	Machine unit number or Subassembly description 572704- -02					Notes
			Quantity					
1	578281 80	Frame bottom part	1					
1A	578280 02	Cover	1					
1B	223412 45	O-ring	1					
2	560131 02	Frame support	4					
3	70490	Washer	4					
4	2210462 32	Screw	4					
5	552766 07	Washer	2					
6	526350 04	Plug	1					
7	565378 01	Plug	1					
8	223404 05	O-ring	1					
9	571743 80	Oil pin	1					
10	562992 01	Bottom bearing holder	1					
11	2234121 38	O-ring	1					
12	562091 01	Strainer	1					
13	573035 02	Wing insert	1					
14	221706 01	Screw	1					
15	2234121 40	O-ring	1					
16	562094 01	Labyrinth ring holder	1					
17	562095 02	Labyrinth ring	1					
18	223412 23	O-ring	1					
19	221716 23	Screw	2					
20	585653 80	Driving device vertical	1					See page 14
21	221721 24	Screw	3					
22	571405 80	Neck bearing cover	1					
22A	221711 18	Screw	1					
23	223412 46	O-ring	1					
24	566788 21	Seal ring	1					
25	564773 02	Deflector ring	1					
26	223406 28	O-ring	1					
27	560202 01	Pipe	1					
28	223404 20	O-ring	1					
29	539418 02	Elbow	1					
30	526352 06	Bushing	1					
31	564493 02	Operating water cover	1					
32	566788 05	Seal ring	1					
33	223412 46	O-ring	1					
34	41456	Washer	3					
35	221040 46	Screw	3					
36	221040 08	Screw	2					
41	561773 03	Plug	1					
42	74067	O-ring	1					
43	221716 23	Screw	1					
44	578019 80	Front casing	1					
44A	578017 02	Holder	1					
44B	578019 01	Front casing	1					
44C	221716 22	Screw	4					
44D	221721 37	Screw	4					
45	221126 04	Screw	1					
46	532333 03	Clamp	1					
47	223101 94	Washer	1					

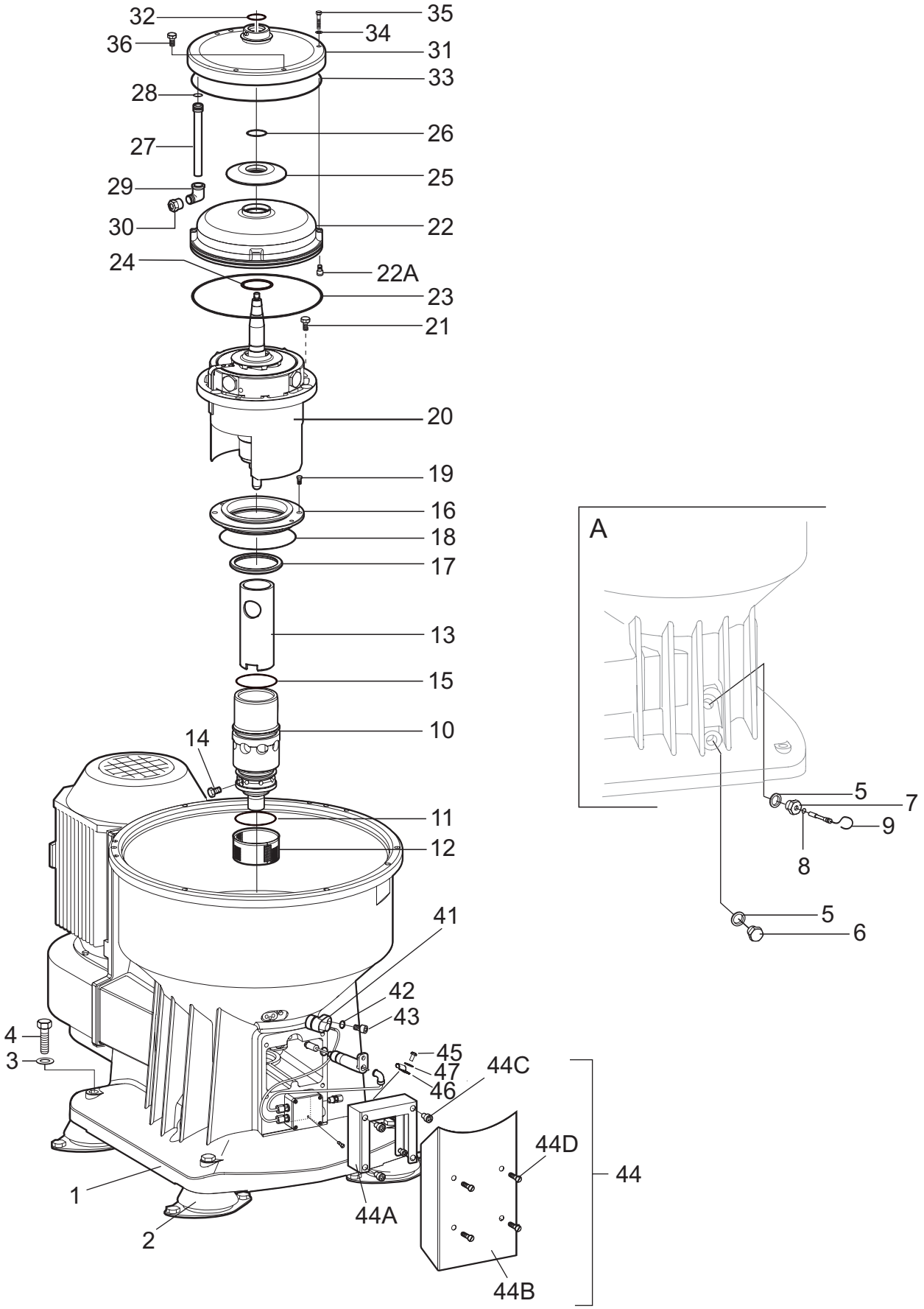
32
35
36
34
31
33
28
26
27
25
29
30
22
24
22A
23
21
20
19
16
18
17
13
15
10
14
11
12
41
42
43
4
3
45
47
46
44C
44D
44
1
44A
2
44B
A
5
7
9
8
5
6
2120T

2.1 Driving device vertical

Ref	Part No	Description	Machine unit number or Subassembly description 585653- -80					Notes
			Quantity					
1	560134 01	Bowl spindle	1					
2	548747 08	Ball bearing	1					
3	584048 80	Top bearing seat	1					
4	223642 36	Snap ring	1					
5	580051 02	Top bearing housing	1					
6	562109 03	Helical spring	3					
7	562110 02	Composite spring	4					
8	560406 01	Plug	4					
9	581543 01	Spindle pulley	1					
10	548744 03	Self-align roller bearing	1					
11	563677 02	Lubrication oil orifice	1					
12	223404 20	O-ring	1					
13	562995 01	Oil pump	1					
14	571453 02	Fan	1					
15	223406 30	O-ring	1					
16	580049 01	Air deflector	1					
17	221716 22	Screw	3					

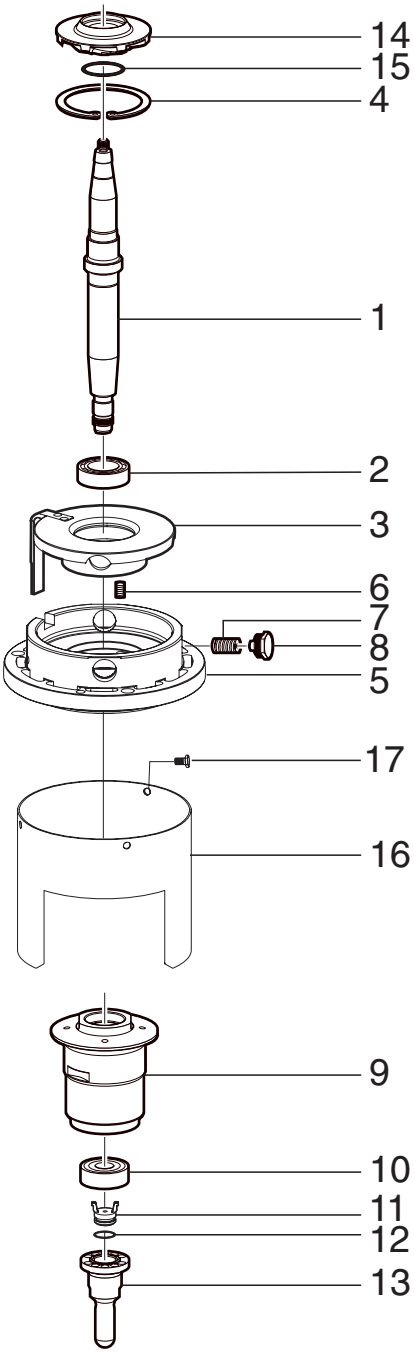

1522Z

3 Separator bowl

Ref	Part No	Description	Machine unit number or Subassembly description 576869- -01					Notes
			Quantity					
1	560634 80	Bowl body	1					
2	560638 01	Rectangular ring	1					
3	560639 01	Operating slide	1					
4	545869 03	Nozzle Ø 1,5 mm	1					
5	560638 01	Rectangular ring	1					
6	564478 01	Valve plug	3					
7	565217 01	Holder	1					
8	223403 61	O-ring	1					
9	576173 01	Hexagon head screw	6					
10	576279 01	Lock washer	6					
11	223406 39	O-ring	1					
12	579323 02	Operating water ring	1					
13	566788 15	Seal ring	1					
14	576173 01	Hexagon head screw	6					
15	260104 05	O-ring	1					
16	574226 01	Discharge slide	1					
17	565295 01	Rectangular ring	1					
18	560649 01	Nut	1					
19	578184 01	Cap nut	1					
20	578220 80	Distributor	1					
21	576884 02	Distributor support	1					Brass
21	576884 04	Distributor support	1					Alternative, Stainless steel
22	223406 23	O-ring	1					
23	221716 16	Screw	4					
24	223406 22	O-ring	1					
25	563089 80	Bowl disc	81					
26	563089 80	Bowl disc	2					
27	563089 01	Bowl disc	1					
28	576987 02	Level ring	1					Brass
28	576987 04	Level ring	1					Alternative, Stainless steel
30	223406 23	O-ring	1					
31	576798 80	Top disc	1					
32	223406 37	O-ring	1					
33	223406 10	O-ring	1					
34	576938 03	Gravity disc Ø 81 mm	1					
35	576938 80	Set of gravity discs	1					
35A	576938 02	Gravity disc Ø 88 mm	1					
35B	576938 04	Gravity disc Ø 75 mm	1					Alternative
35C	576938 05	Gravity disc Ø 70,3 mm	1					Alternative
35D	576938 06	Gravity disc Ø 66,5 mm	1					Alternative
35E	576938 07	Gravity disc Ø 63,4 mm	1					Alternative
35F	576938 08	Gravity disc Ø 61 mm	1					Alternative
35G	576938 09	Gravity disc Ø 59 mm	1					Alternative
35H	576938 10	Gravity disc Ø 57,5 mm	1					Alternative
35I	576938 11	Gravity disc Ø 55,9 mm	1					Alternative
35J	576938 12	Gravity disc Ø 54,3 mm	1					Alternative
35K	576938 13	Gravity disc Ø 52,7 mm	1					Alternative
36	576938 01	Gravity disc Ø 40 mm	1					Clarifier disc
37	576932 01	Bowl hood	1					
38	564403 01	Seal ring	1					
39	260247 02	O-ring	1					
40	560661 80	Lock ring	1					

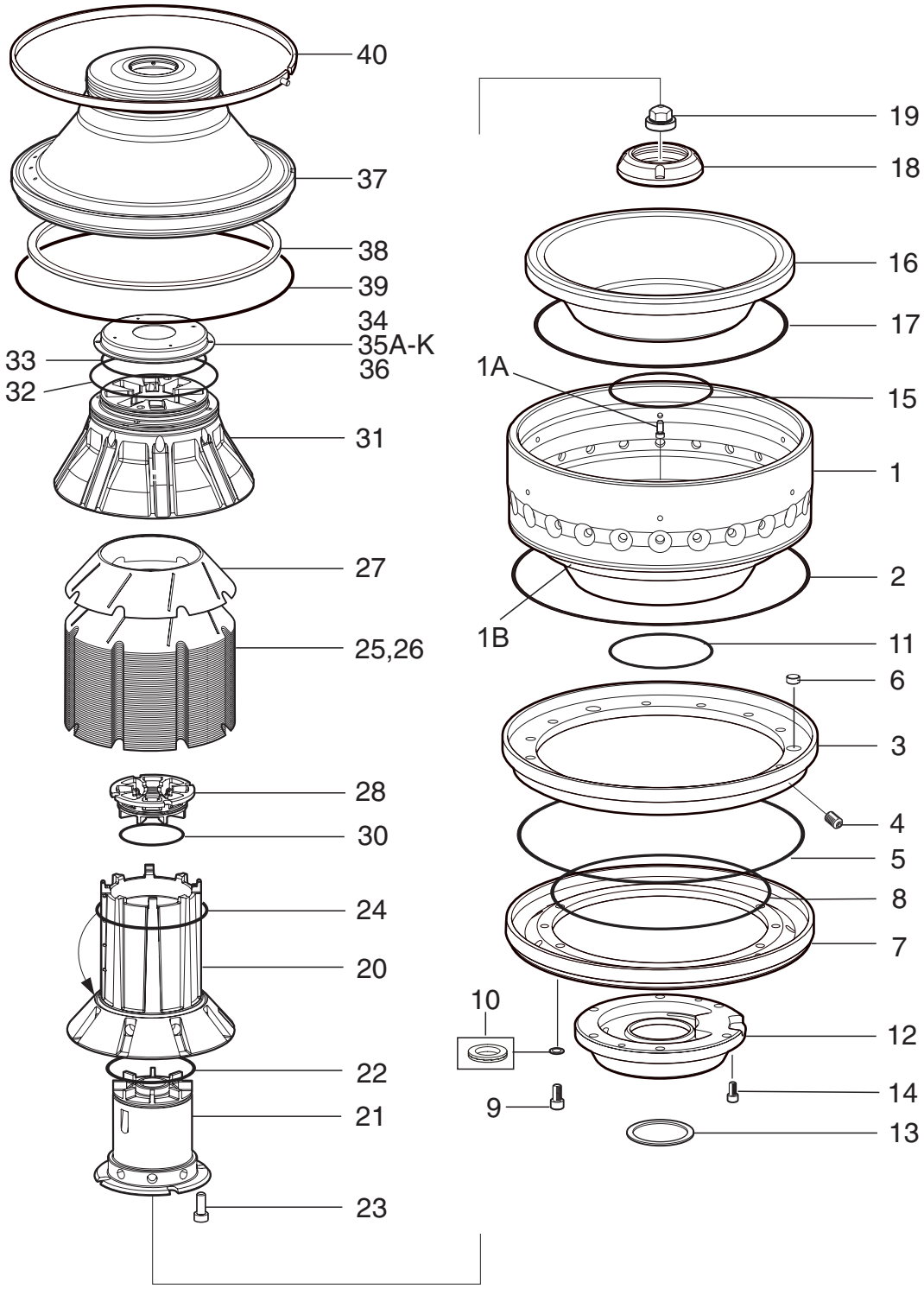
40
37
38
39
34
35A-K
33
36
32
31
27
25,26
28
30
24
20
22
21
23
19
18
16
17
1A
15
1
2
1B
11
6
3
4
5
8
7
10
12
14
9
13

2119B

4 Inlet and outlet device

Ref	Part No	Description	Machine unit number or Subassembly description 576874- -02					Notes
			Quantity					
1	577024 81	Inlet and outlet pipe	1					
2	223406 26	O-ring	1					
3	588221 80	Frame hood	1					
4	561957 01	Height adjusting ring	4					
5	576933 01	Support ring	1					
6	221716 09	Screw	4					
7	521127 11	O-ring	1					
8	41456	Washer	6					
9	221040 05	Screw	6					
10	223406 25	O-ring	1					
11	223406 25	O-ring	1					
12	576866 02	Connecting housing	1					
13	223406 32	O-ring	1					
14	552766 09	Washer	1					
15	1763780 07	Nipple	1					
16	1761834 09	Cu washer	1					
17	1766162 01	Non return valve	1					
18	567501 02	Nut	1					
19	574625 02	Inlet bend	1					
20	223406 16	O-ring	1					
21	223642 22	Snap ring	1					
22	588222 01	Safety device	1					
23	221046 22	Screw	1					

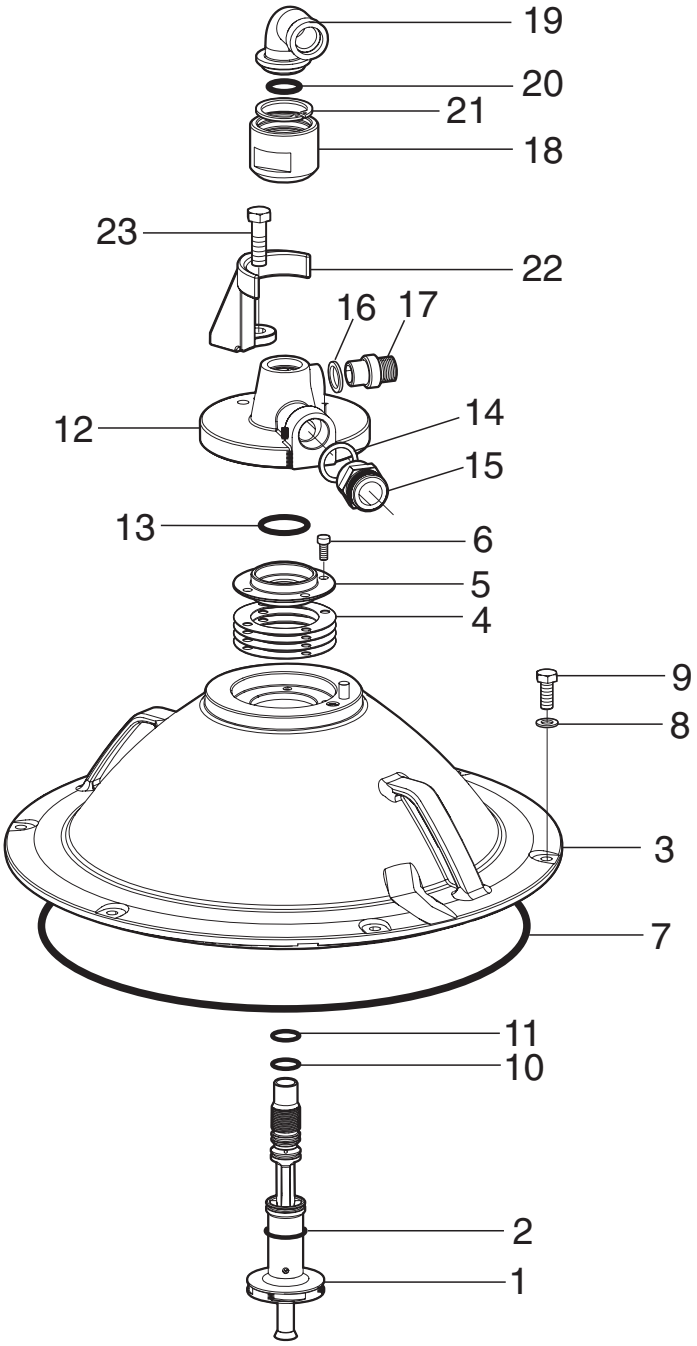

2121B

5 Belt driving device

Ref	Part No	Description	Machine unit number or Subassembly description 561118- -01	-02				Notes
			Quantity					
		50 Hz	↓					
		60 Hz		↓				
1	577705 80	Clutch cover	1	1				
2	561114 01	Cover support	1	1				
3	564095 80	Centrifugal clutch		1				See page 22
3	564095 81	Centrifugal clutch	1					See page 22
4	221045 60	Screw	1	1				
5	223107 35	Spring washer	1	1				
6	547837 01	Washer	1	1				
7	221040 42	Screw	3	3				
8	41456	Washer	3	3				
9	221721 37	Screw	4	4				
10	41456	Washer	8	8				
11	221040 58	Screw	4	4				
12	35120	Nut	4	4				
13	563464 01	Flat belt	1					
13	563467 01	Flat belt		1				

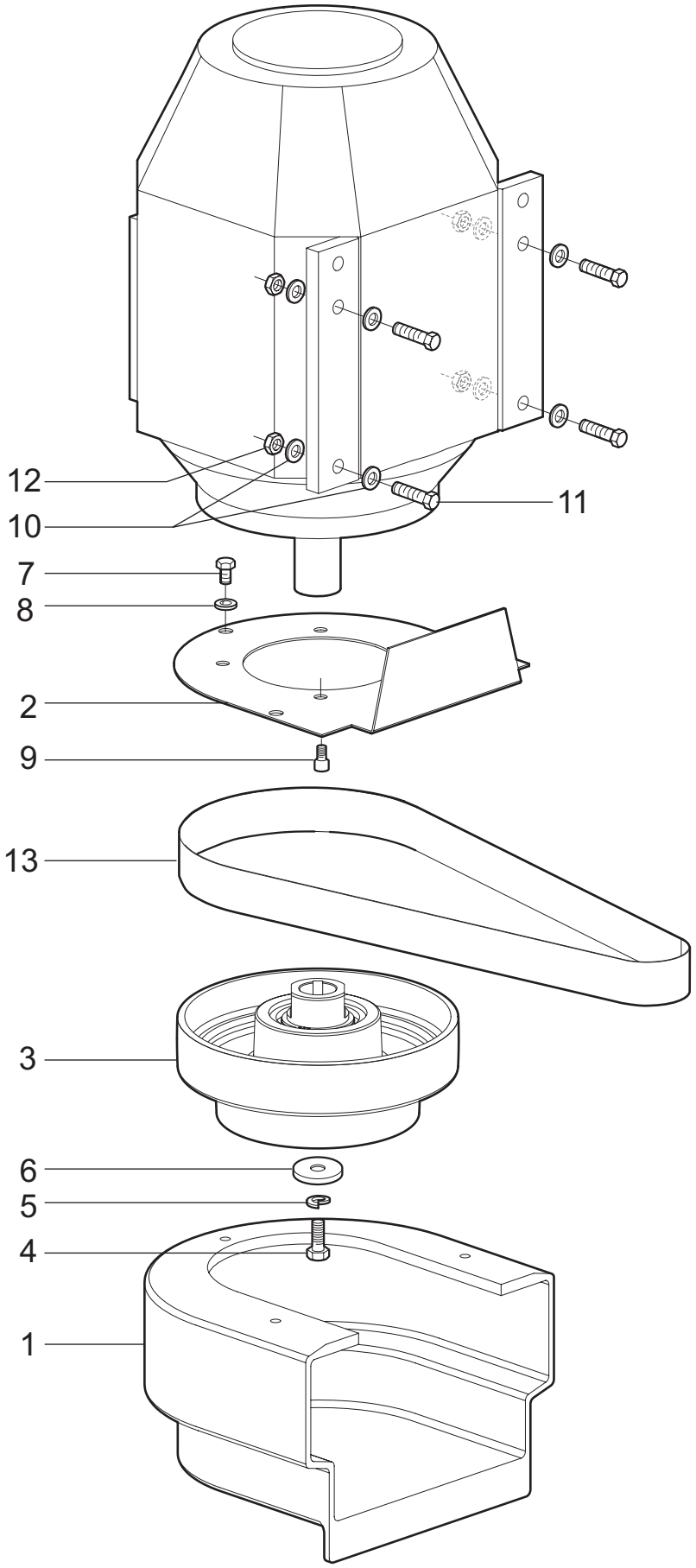

1524D

5.1 Centrifugal clutch

Ref	Part No	Description	Machine unit number or Subassembly description 564095- -81	-80				Notes
			Quantity					
		50 Hz	↓					
		60 Hz		↓				
1	560426 02	Motor belt pulley		1				
1	560426 04	Motor belt pulley	1					
2	548051 49	Ball bearing	2	2				
3	547833 01	Spacing ring	1	1				
4	66251	Snap ring	1	1				
5	564089 80	Coupling hub		1				
5	564100 80	Coupling hub	1					
6	223641 18	Snap ring	1	1				
8	564075 80	Friction block	5	3				
9	549325 01	Cover	1	1				
10	223641 20	Snap ring	1	1				

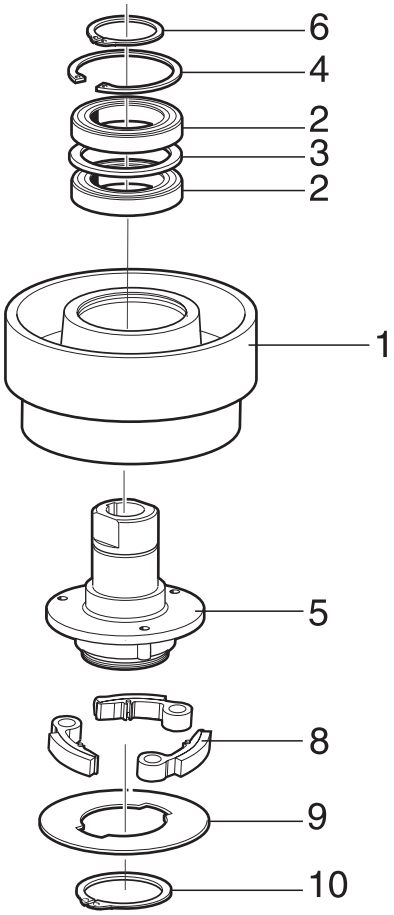

1523D

6 Set of plates

Ref	Part No	Description	Machine unit number or Subassembly description 549572- -84					Notes
			Quantity					
3	1270019	Set of safety labels	1					
3A	1270018 01	Safety label sv	1					
3B	1270018 02	Safety label en	1					
3C	1270018 03	Safety label de	1					
3D	1270018 04	Safety label fr	1					
3E	1270018 05	Safety label es	1					
3F	1270018 06	Safety label ru	1					
3G	1270018 07	Safety label it	1					
3H	1270018 08	Safety label pt	1					
3I	1270018 09	Safety label pl	1					
3J	1270018 10	Safety label el	1					
3K	1270018 11	Safety label fi	1					
3L	1270018 12	Safety label zh	1					
3M	1270018 13	Safety label da	1					
3N	1270018 14	Safety label ar	1					
3O	1270018 15	Safety label nl	1					
3P	1270018 16	Safety label cs	1					
3Q	1270018 17	Safety label ja	1					
3R	1270018 18	Safety label ko	1					
3S	1270018 19	Safety label no	1					
4	577802 01	Name sign	1					For GL approval, see order
4	577803 01	Name sign	1					
4	591263 01	Name sign	1					DNV approval, see order
5	66169	Drive screw	4					
6	553171 01	Label 50 Hz	1					
6	553272 01	Label 60 Hz	1					
7	555529 01	Plate with arrow	1					
8	1270001	Lifting instruction	1					
9	554214 02	Cable tie	1					

1

2

3,3A-S

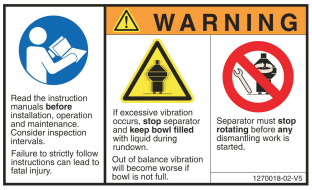

4

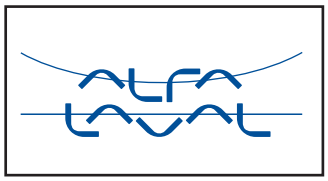

5

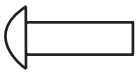

6

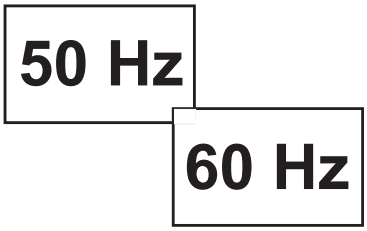

7

8

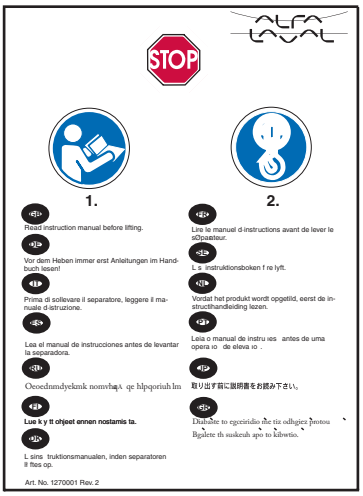

9

2036D

7 Speed sensor kit

"Junction box kit" recommended

Ref	Part No	Description	Machine unit number or Subassembly description 566718- -02					Notes
			Quantity					
1	562902 80	Sensor with support	1					
3	552870 41	Tube gland, angle 90 degris	1					
5	556416 11	Protective tube	1					
8	221716 23	Screw	1					

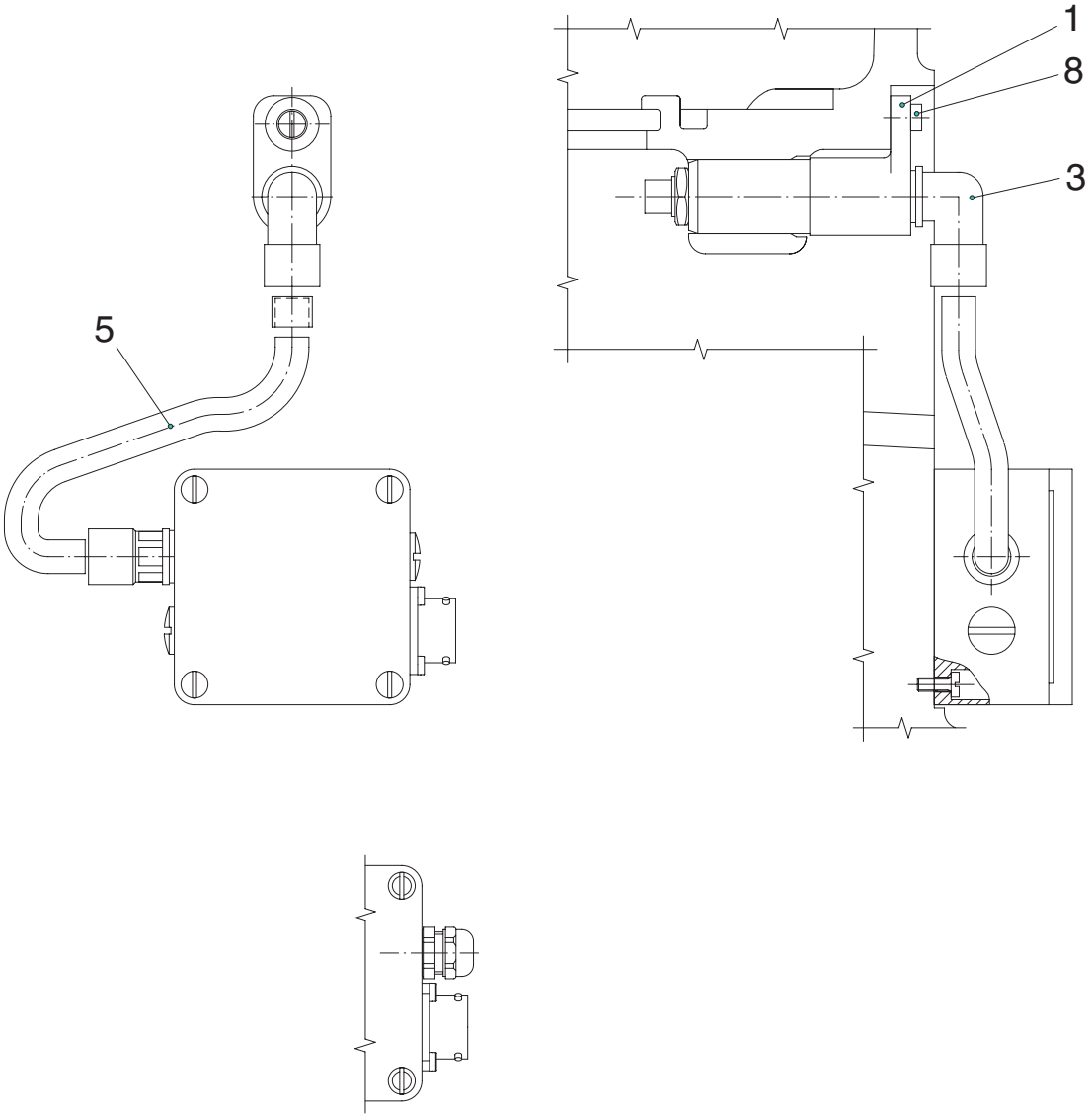

2196C

8 Monitoring kit

Unbalance sensor

Ref	Part No	Description	Machine unit number or Subassembly description 566727- -02					Notes
			Quantity					
1	570142 01	Inductive analogue sensor	1					
2	561773 04	Sensor holder	1					
4	552870 21	Tube gland, straight	1					
6	556416 17	Protective tube	1					

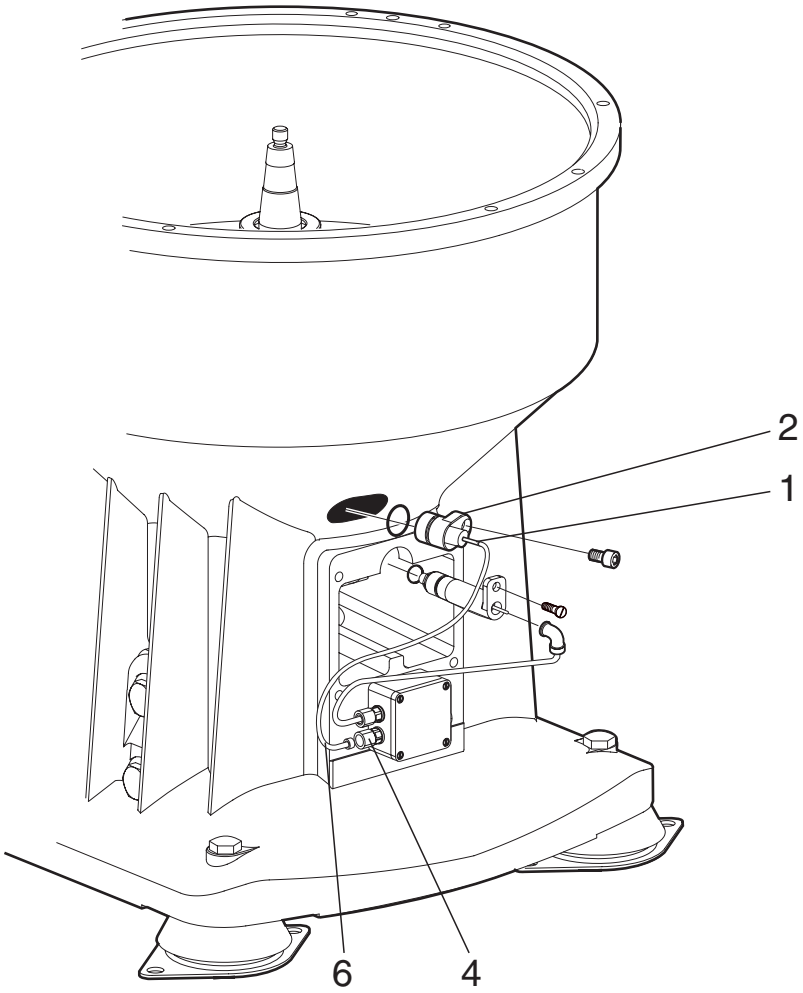

1769B

9 Cover interlocking kit

"Junction box kit" required

Ref	Part No	Description	Machine unit number or Subassembly description 570819- -02					Notes
			Quantity					
1	552870 21	Tube gland, straight	1					
2	566054 01	Limit switch	1					
3	556416 24	Protective tube	1					

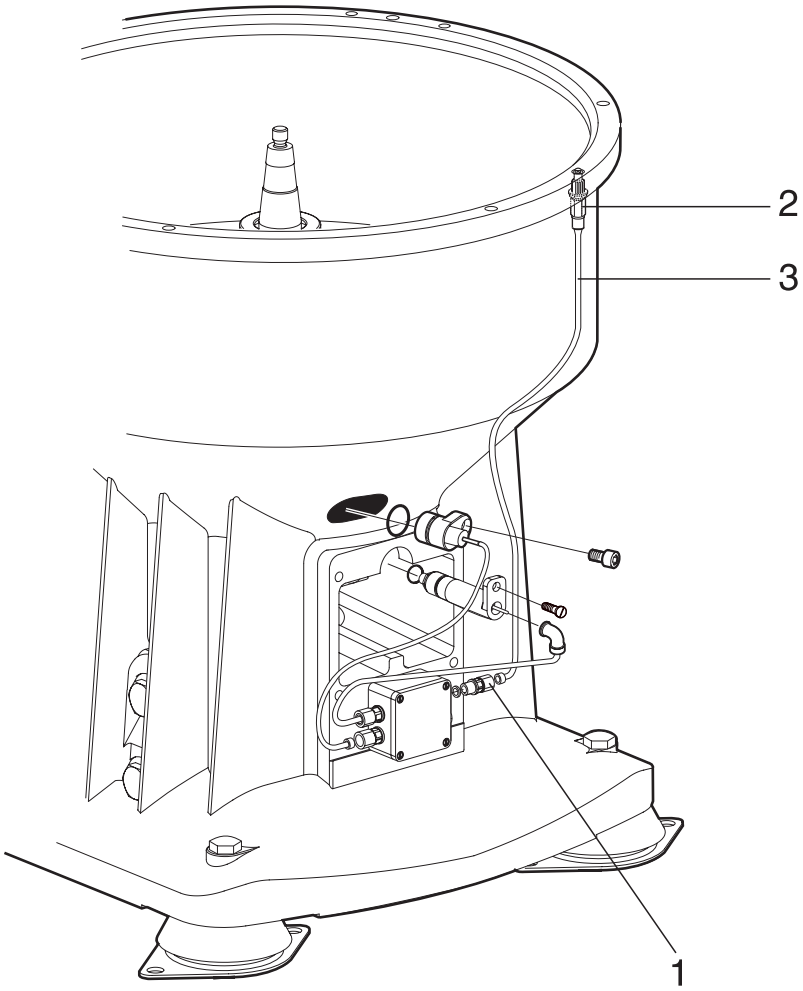

1769C

10 Junction box kit

No more than one

Ref	Part No	Description	Machine unit number or Subassembly description 566692- -83					Notes
			Quantity					
1	566692 01	Box	1					
2	566682 01	Terminal row	1					
3	221115 19	Screw	6					
4	566687 80	Connector	1					
5	552870 21	Tube gland, straight	1					
7	552851 31	Stopping plug	2					
9	17812	Screw	2					

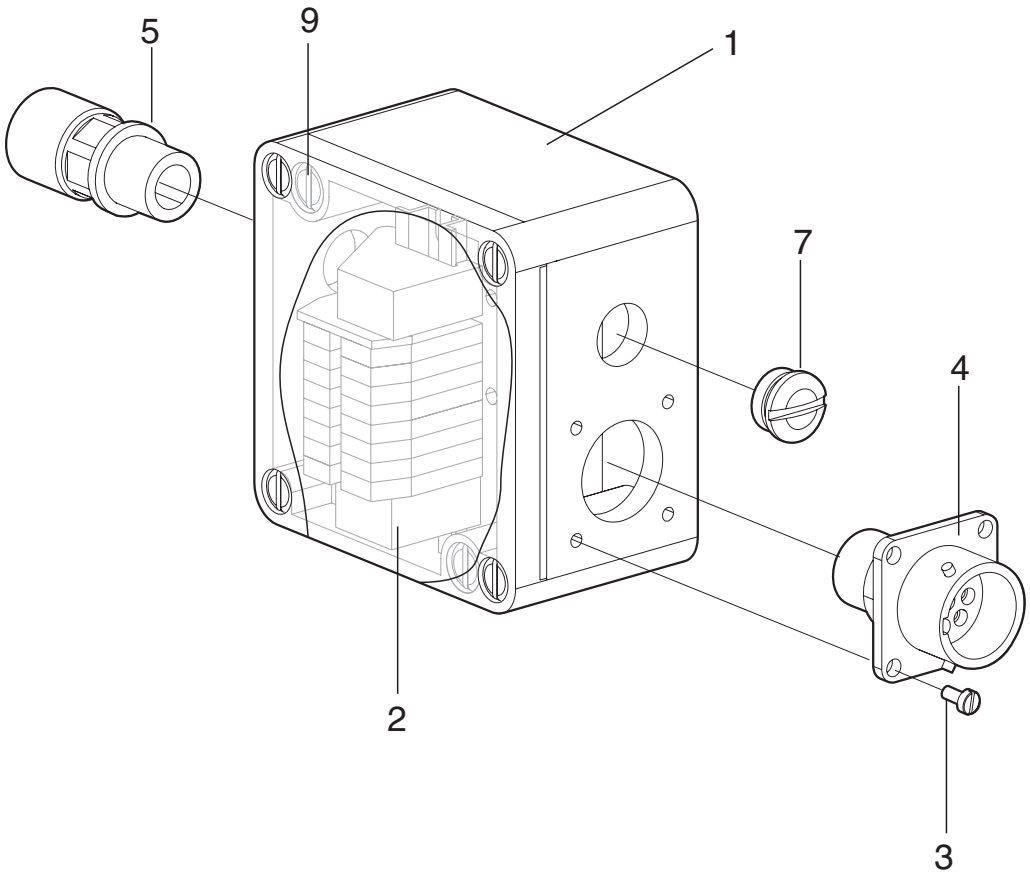

2019B

11 Set of tools

Ref	Part No	Description	Machine unit number or Subassembly description 561614- -21	-22				Notes
			Quantity					
		Without hydraulic tool for coupling	↓					
		With hydraulic tool for coupling		↓				
1	561593 80	Puller	1	1				Spindle pulley/ Neck bearing
1A	561829 01	Screw	1	1				
3	561369 02	Spanner for nut	1	1				Nut/ Discharge slide
4	575055 81	Compressing tool	1	1				Disc stack
4A	575055 80	Compressing tool	1	1				
4B	575083 02	Clamp	3	3				
4C	575098 01	Screw	3	3				
4D	221045 52	Screw	3	3				
4E	561551 02	Screw	3	3				
5	561584 80	Puller	1	1				Bowl body
6	572730 80	Pin spanner	1	1				Fan
6A	260121 56	Cylindrical pin	2	2				
7	561607 80	Puller	1	1				Discharge slide
7A	561610 01	Support ring	1	1				
7B	221040 43	Screw	1	1				
8	260154 01	Lifting eye bolt	2	2				
9	221706 05	Screw	6	6				Lock ring/ Bowl body
10	548457 80	Tool for belt pulley	1					
10	574986 04	Hydraulic tool kit		1				See page 36
10A	223406 13	O-ring	1					
11	567008 80	Lifting tool	1	1				Distributor/ Bowl spindle
12	561439 01	Drift	1	1				Bottom bearing
13	589776 01	Key	1	1				Bottom bearing housing
14	563084 80	Puller	2	2				Neck bearing cover
14A	221040 05	Screw	1	1				
14B	221035 46	Screw	1	1				
15	548043 01	Mounting tool	1	1				Coupling bearing
17	548050 04	Spanner	1	1				Nut/ Inlet and outlet pipe
18	66414	Hexagon socket head key	1	1				Lock ring/ Bowl body
19	566441 01	Sleeve	1	1				Neck bearing
20	566614 01	Chisel	1	1				Seal ring
21	577972 01	Pin	1	1				Distributor
22	585810 01	Crowfoot wrench head	1	1				Oil mist generator
99	588067	Exploded view	1					
99	588069	Exploded view		1				

1742R

11.1 Hydraulic tool kit

Ref	Part No	Description	Machine unit number or Subassembly description 574986- -04					Notes
			Quantity					
1	574618 80	Hydraulic components	1					See page 38
2	574626 82	Hydraulic tool	1					See page 40

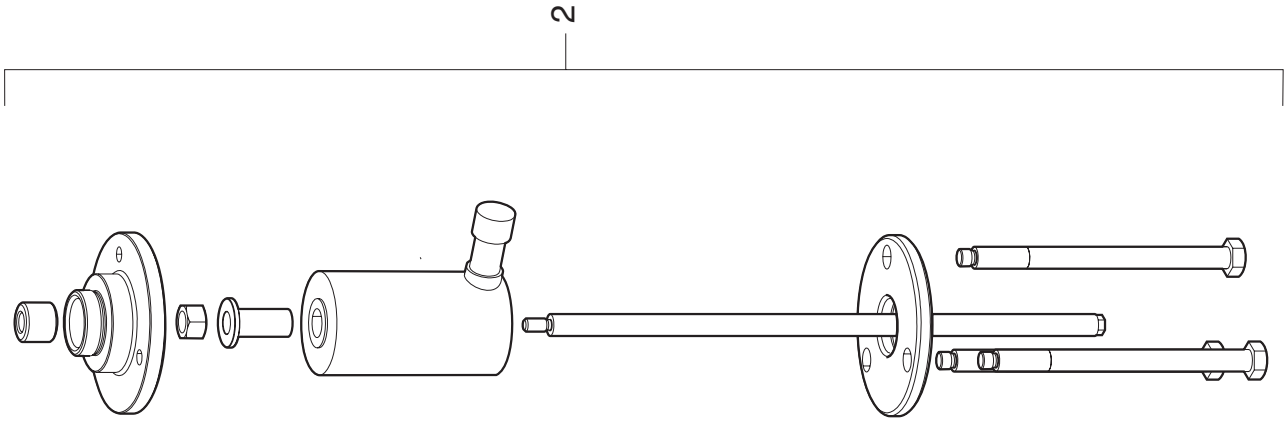

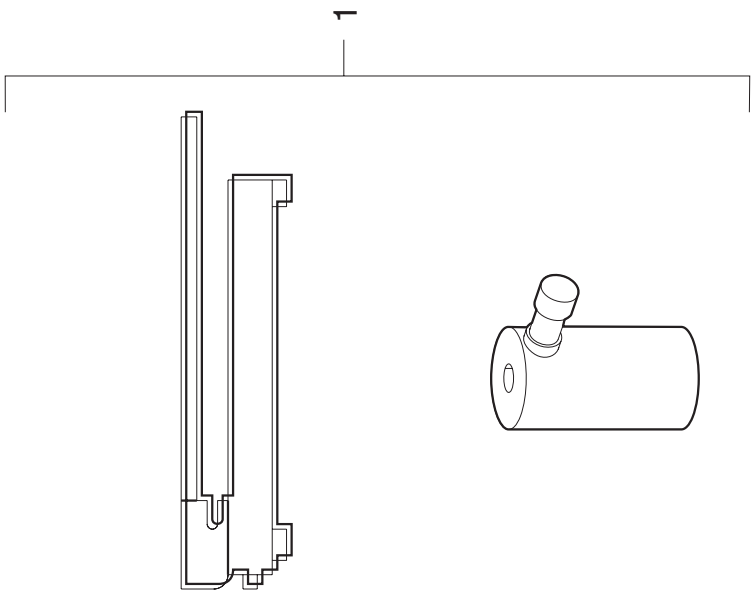

2047D

11.1.1 Hydraulic components

Ref	Part No	Description	Machine unit number or Subassembly description 574618- -80					Notes
			Quantity					
1	574618 01	Pump with hose	1					
2	574618 02	Hydraulic cylinder	1					

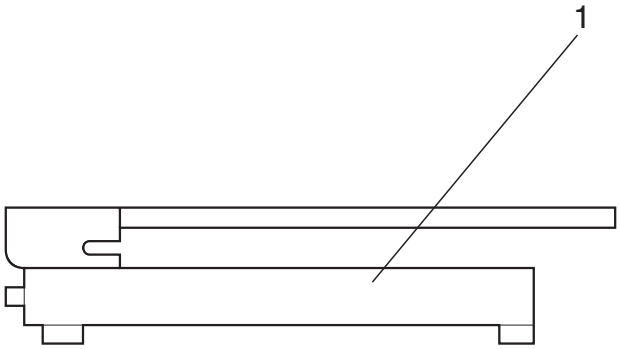

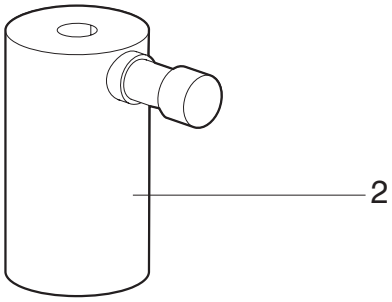

2050A

11.1.2 Hydraulic tool

Ref	Part No	Description	Machine unit number or Subassembly description 574626- -82					Notes
			Quantity					
1	571628 01	Stud bolt	1					
2	574627 03	Sleeve	1					
3	571627 01	Holder	1					
4	221803 35	Nut	1					
5	574954 01	Sleeve	1					
6	571620 01	Plate	1					
7	571622 01	Screw	3					

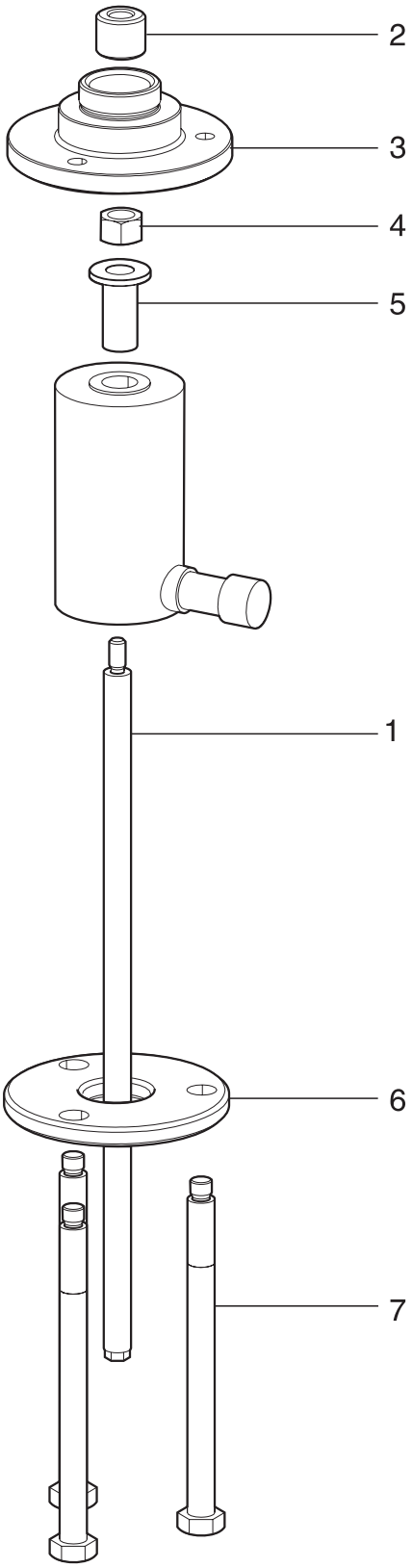

2047A

12 Inspection kit

Ref	Part No	Description	Machine unit number or Subassembly description 563859- -02					Notes
			Quantity					
1	560638 01	Rectangular ring	1					Bowl body/ Operating slide
2	560638 01	Rectangular ring	1					Operating slide/ Holder
3	564478 01	Valve plug	3					Operating slide/ Bowl body
4	223406 39	O-ring	1					Bowl body/ Operating water ring
5	260104 05	O-ring	1					Bowl body/ Discharge slide
6	565295 01	Rectangular ring	1					Discharge slide/ Bowl body
8	564403 01	Seal ring	1					Bowl hood/ Discharge slide
9	260247 02	O-ring	1					Bowl hood/ Bowl body
14	521127 11	O-ring	1					Frame hood/ Frame bottom part
15	552766 07	Washer	2					Frame bottom part/ Plug
16	537086 06	Lubricating paste G-n Plu	1					
17	539474 03	Silicone grease	1					
18	223404 05	O-ring	1					Oil pin/ Plug
19	221706 05	Screw	6					Lock ring
20	66414	Hexagon socket head key	1					Lock ring
22	566788 15	Seal ring	1					Operating water cover
23	223403 61	O-ring	1					Bowl body/ Holder
28	576279 01	Lock washer	6					Holder/ Bowl body
29	576173 01	Hexagon head screw	6					Holder/ Bowl body
30	576173 01	Hexagon head screw	6					Operating water ring/ Bowl body
31	223406 23	O-ring	1					Distributor support/ Distributor
32	223406 22	O-ring	1					Distributor/ Disc stack
33	223406 23	O-ring	1					Level ring/ Distributor
34	223406 37	O-ring	1					Top disc/ Bowl hood
35	223406 10	O-ring	1					Top disc/ Gravity disc
36	223406 26	O-ring	1					Inlet and outlet pipe/ Support ring
37	223406 25	O-ring	2					Inlet and outlet pipe/ Connecting housing
38	223406 32	O-ring	1					Connecting housing/ Support ring
39	223406 16	O-ring	1					Inlet bend/ Inlet and outlet pipe
40	535586 80	Anti-friction coating	1					
97	590994 02	Service Bulletin	1					
98	575939	Separator checkpoints	1					
99	578119	Exploded view	1					

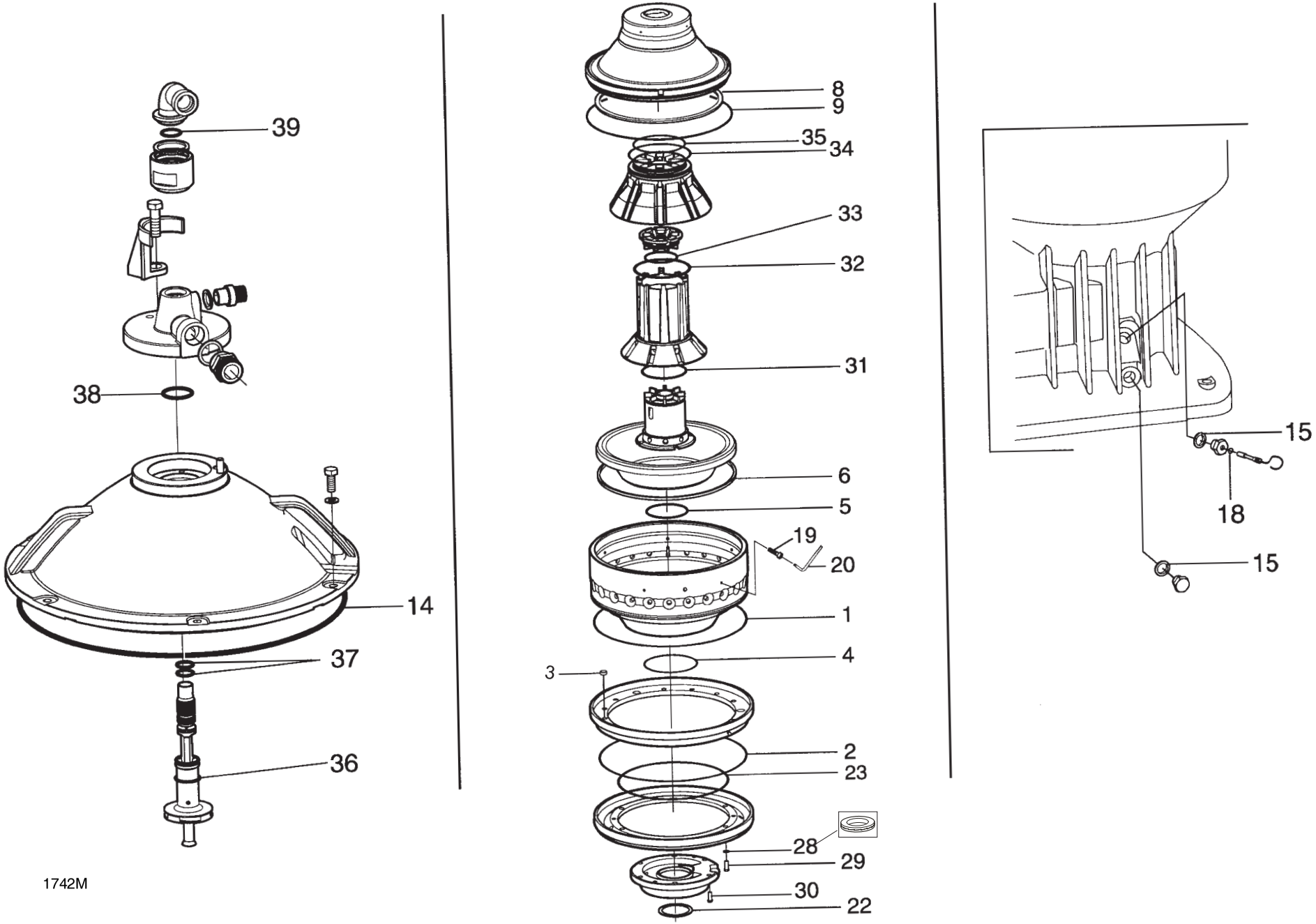

1742M

13 Overhaul kit

Ref	Part No	Description	Machine unit number or Subassembly description 563869- -05	-06				Notes
			Quantity					
		50 Hz	↓					
		60 Hz		↓				
1	563859 02	Inspection kit	1	1				See page 42
2	2234121 38	O-ring	1	1				Strainer/ Bottom bearing housing
3	2234121 40	O-ring	1	1				Bottom bearing housing
4	562095 02	Labyrinth ring	1	1				Labyrinth ring holder/ Spindle pulley
5	223412 23	O-ring	1	1				Labyrinth ring holder/ Frame bottom part
6	223412 46	O-ring	1	1				Neck bearing cover/ Frame bottom part
7	566788 21	Seal ring	1	1				Neck bearing cover/ Fan
8	223406 28	O-ring	1	1				Deflector ring/ Bowl spindle
9	223404 20	O-ring	1	1				Pipe/ Operating water cover
10	223412 46	O-ring	1	1				Operating water cover
11	566788 05	Seal ring	1	1				Bowl spindle/ Operating water cover
12	544465 10	Locking liquid	1	1				Bottom bearing holder
14	74067	O-ring	1	1				Plug/ Frame bottom part
15	548747 08	Ball bearing	1	1				Bowl spindle/ Top bearing seat
16	223642 36	Snap ring	1	1				Top bearing seat/ Ball bearing
17	562109 03	Helical spring	3	3				Top bearing seat/ Top bearing housing
18	562110 02	Composite spring	4	4				Top bearing seat/ Plug
19	548744 03	Self-align roller bearing	1	1				Bowl spindle/ Bottom bottom housing
20	223404 20	O-ring	1	1				Lubrication oil orifice/ Oil pump
21	223406 30	O-ring	1	1				Bowl spindle/ Fan
22	545869 03	Nozzle Ø 1,5 mm	1	1				Operating slide
25	548051 49	Ball bearing	2	2				Coupling hub/ Motor belt pulley
26	66251	Snap ring	1	1				Motor belt pulley/ Ball bearing
27	223641 18	Snap ring	1	1				Coupling hub/ Ball bearing
28	564075 80	Friction block	5	3				Coupling hub/ Motor belt pulley
29	223641 20	Snap ring	1	1				Coupling hub/ Cover
30	223107 35	Spring washer	1	1				Motor shaft/ Screw
31	563464 01	Flat belt	1					Motor belt pulley/ Spindle puley
31	563467 01	Flat belt		1				Motor belt pulley/ Spindle puley
99	578117	Exploded view	1	1				

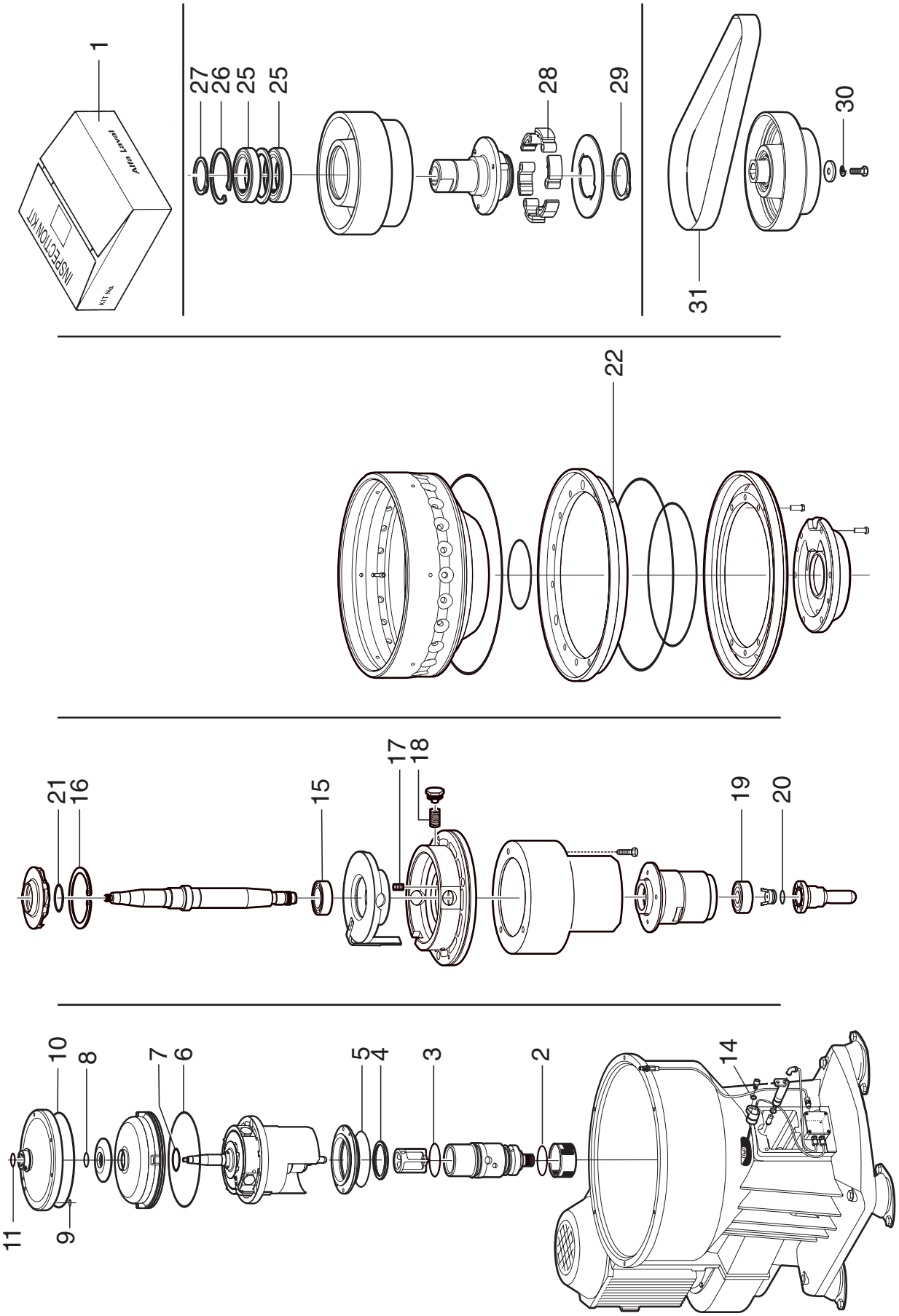
1
INSPECTION KIT
ALFA LAVAL
KIT No.
27
26
25
25
28
29
30
31
22
21
16
15
17
18
19
20
11
9
10
8
7
6
5
4
3
2
14
1742P

14 Support kit

Ref	Part No	Description	Machine unit number or Subassembly description 563877- -02					Notes
			Quantity					
1	526350 04	Plug	1					Frame bottom part
2	221716 23	Screw	2					Labyrinth ring holder
3	221721 24	Screw	3					Top bearing housing/ Frame bottom
4	221711 18	Screw	1					Neck bearing cover
5	564773 02	Deflector ring	1					Bowl spindle
6	41456	Washer	3					Screw/ Operating water cover
7	221040 46	Screw	3					Operating water cover
10	221716 23	Screw	1					Frame bottom part/ Plug
13	221040 41	Screw	3					Top bearing housing/ Air defle.
15	560661 80	Lock ring	1					Bowl body/ Bowl hood
16	561298 01	Cap nut	1					Bowl spindle/ Bowl body
21	561957 01	Height adjusting ring	4					Frame hood/ Support ring
23	221716 09	Screw	4					Height adjusting ring/ Support ring
25	223642 22	Snap ring	1					Inlet bend/ Nut
27	41456	Washer	6					Frame hood/ Frame bottom part
28	221040 05	Screw	6					Frame hood/ Frame bottom part
29	547833 01	Spacing ring	1					Ball bearing/ Ball bearing
30	41456	Washer	8					Motor/ Frame bottom part
31	221040 58	Screw	4					Motor/ Frame bottom part
32	35120	Nut	4					Motor/ Frame bottom part
33	565378 01	Plug	1					Frame bottom part
34	571743 80	Oil pin	1					Frame bottom part/ Plug
35	563677 02	Lubrication oil orifice	1					Oil pump
36	561369 02	Spanner for nut	1					Nut/ Discharge slide
37	2210463 22	Screw	1					Safety device/ Connecting housing
99	578118	Exploded view	1					

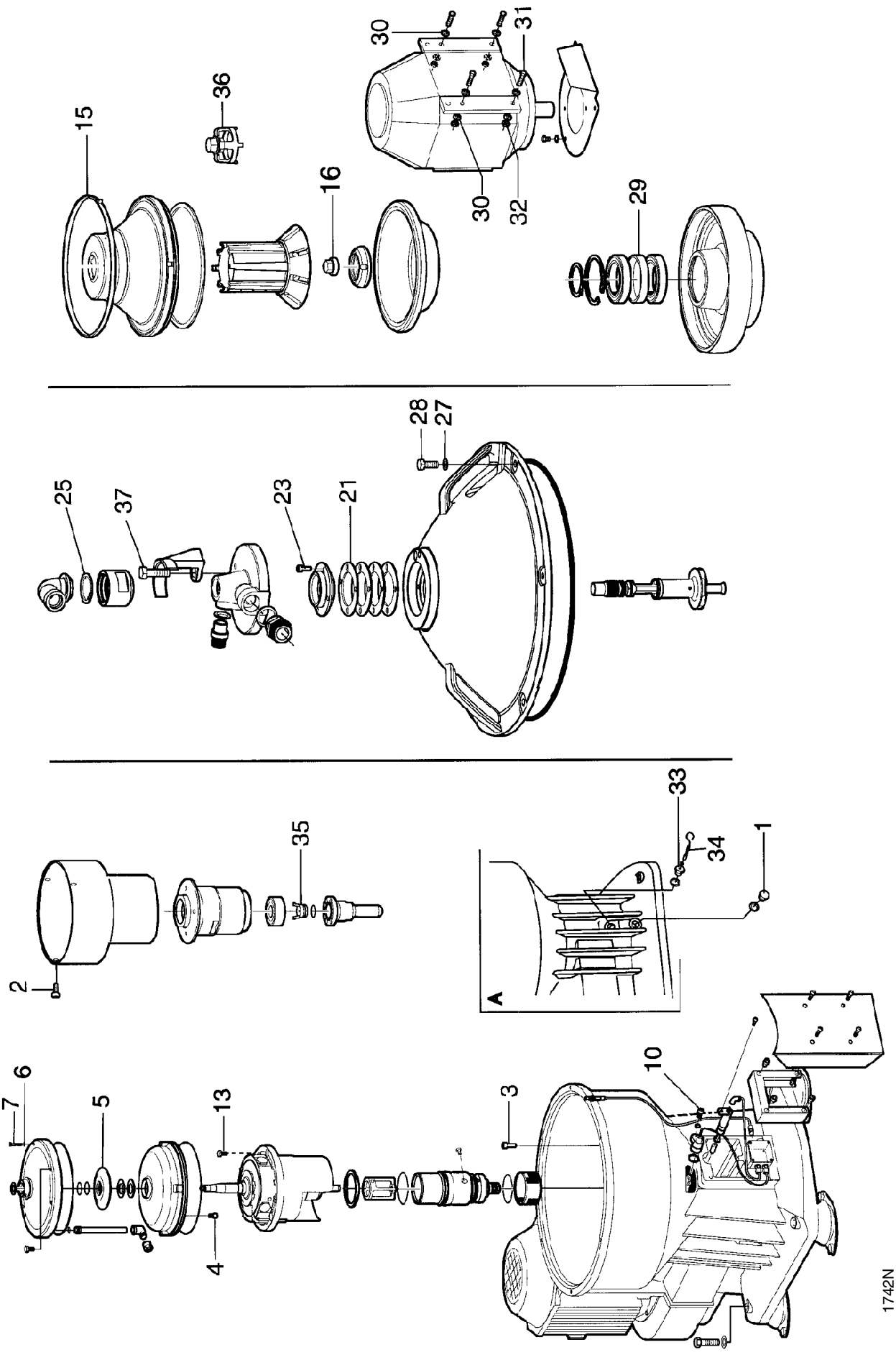
15
36
16
30
31
30
32
29
25
37
23
21
28
27
2
35
A
33
34
1
7
6
5
13
4
3
10
1742N

15 Lifting tool

Separator

Ref	Part No	Description	Machine unit number or Subassembly description 563453- -80				Notes
			Quantity				
6	260236 03	Shackle	2				

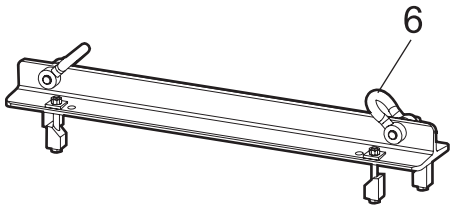

1686A

16 Tool box

Ref	Part No	Description	Machine unit number or Subassembly description 558533- -81					Notes
			Quantity					
7	558533 10	Padlock	1					

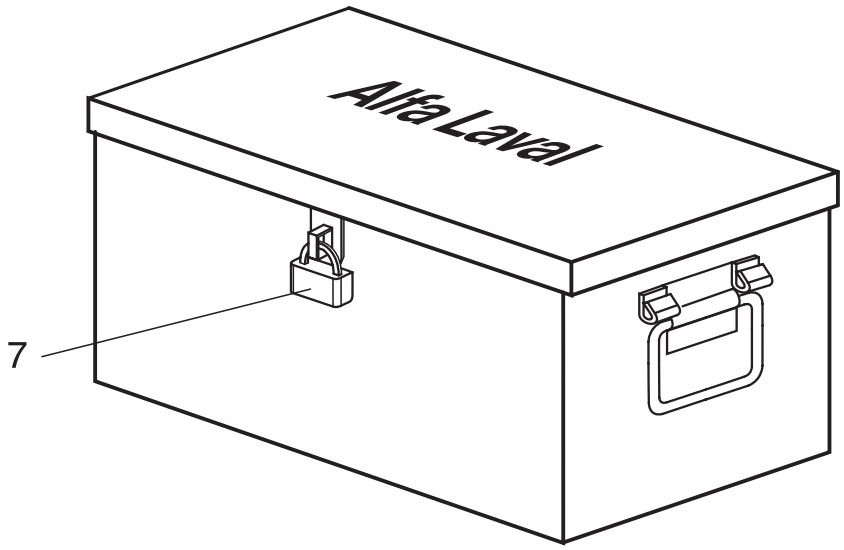

1448A

17 Cross reference list

Part No.	Page	Ref.
1270001	24	8
1270018 01	24	3A
1270018 02	24	3B
1270018 03	24	3C
1270018 04	24	3D
1270018 05	24	3E
1270018 06	24	3F
1270018 07	24	3G
1270018 08	24	3H
1270018 09	24	3I
1270018 10	24	3J
1270018 11	24	3K
1270018 12	24	3L
1270018 13	24	3M
1270018 14	24	3N
1270018 15	24	3O
1270018 16	24	3P
1270018 17	24	3Q
1270018 18	24	3R
1270018 19	24	3S
1270019	24	3
1761834 09	18	16
1763780 07	18	15
1766162 01	18	17
17812	32	9
221035 46	34	14B
221040 05	18	9
221040 05	34	14A
221040 05	46	28
221040 08	12	36
221040 41	46	13
221040 42	20	7
221040 43	34	7B
221040 46	46	7
221040 46	12	35
221040 58	20	11
221040 58	46	31
221045 52	34	4D
221045 60	20	4
221046 22	18	23
2210462 32	12	4
2210463 22	46	37
221115 19	32	3
221126 04	12	45
221706 01	12	14
221706 05	34	9
221706 05	42	19
221711 18	12	22A
221711 18	46	4
221716 09	18	6

Part No.	Page	Ref.
221716 09	46	23
221716 16	16	23
221716 22	12	44C
221716 22	14	17
221716 23	26	8
221716 23	12	19
221716 23	46	2
221716 23	46	10
221716 23	12	43
221721 24	12	21
221721 24	46	3
221721 37	20	9
221721 37	12	44D
221803 35	40	4
223101 94	12	47
223107 35	20	5
223107 35	44	30
223403 61	42	23
223403 61	16	8
223404 05	12	8
223404 05	42	18
223404 20	44	9
223404 20	12	28
223404 20	44	20
223404 20	14	12
223406 10	16	33
223406 10	42	35
223406 13	34	10A
223406 16	18	20
223406 16	42	39
223406 22	42	32
223406 22	16	24
223406 23	42	31
223406 23	42	33
223406 23	16	22
223406 23	16	30
223406 25	18	10
223406 25	18	11
223406 25	42	37
223406 26	18	2
223406 26	42	36
223406 28	12	26
223406 28	44	8
223406 30	44	21
223406 30	14	15
223406 32	18	13
223406 32	42	38
223406 37	16	32
223406 37	42	34
223406 39	42	4

Part No.	Page	Ref.
223406 39	16	11
223412 23	12	18
223412 23	44	5
223412 45	12	1B
223412 46	12	23
223412 46	44	6
223412 46	44	10
223412 46	12	33
2234121 38	12	11
2234121 38	44	2
2234121 40	12	15
2234121 40	44	3
223641 18	22	6
223641 18	44	27
223641 20	22	10
223641 20	44	29
223642 22	18	21
223642 22	46	25
223642 36	44	16
223642 36	14	4
260104 05	42	5
260104 05	16	15
260121 56	34	6A
260154 01	34	8
260236 03	48	6
260247 02	16	39
260247 02	42	9
35120	20	12
35120	46	32
41456	18	8
41456	20	8
41456	20	10
41456	46	6
41456	46	27
41456	46	30
41456	12	34
521127 11	18	7
521127 11	42	14
526350 04	46	1
526350 04	12	6
526352 06	12	30
532333 03	12	46
535586 80	42	40
537086 06	42	16
539418 02	12	29
539474 03	42	17
544465 10	44	12
545869 03	44	22
545869 03	16	4
547833 01	22	3

Part No.	Page	Ref.
547833 01	46	29
547837 01	20	6
548043 01	34	15
548050 04	34	17
548051 49	22	2
548051 49	44	25
548457 80	34	10
548744 03	44	19
548744 03	14	10
548747 08	44	15
548747 08	14	2
549325 01	22	9
552766 07	42	15
552766 07	12	5
552766 09	18	14
552851 31	32	7
552870 21	28	4
552870 21	30	1
552870 21	32	5
552870 41	26	3
553171 01	24	6
553272 01	24	6
554214 02	24	9
555529 01	24	7
556416 11	26	5
556416 17	28	6
556416 24	30	3
558533 10	50	7
560131 02	12	2
560134 01	14	1
560202 01	12	27
560406 01	14	8
560426 02	22	1
560426 04	22	1
560634 80	16	1
560638 01	42	1
560638 01	42	2
560638 01	16	2
560638 01	16	5
560639 01	16	3
560649 01	16	18
560661 80	16	40
560661 80	46	15
561114 01	20	2
561298 01	46	16
561369 02	34	3
561369 02	46	36
561439 01	34	12
561551 02	34	4E
561584 80	34	5

Part No.	Page	Ref.
561593 80	34	1
561607 80	34	7
561610 01	34	7A
561773 03	12	41
561773 04	28	2
561829 01	34	1A
561957 01	18	4
561957 01	46	21
562091 01	12	12
562094 01	12	16
562095 02	12	17
562095 02	44	4
562109 03	44	17
562109 03	14	6
562110 02	44	18
562110 02	14	7
562902 80	26	1
562992 01	12	10
562995 01	14	13
563084 80	34	14
563089 01	16	27
563089 80	16	25
563089 80	16	26
563464 01	20	13
563464 01	44	31
563467 01	20	13
563467 01	44	31
563677 02	46	35
563677 02	14	11
563859 02	44	1
564075 80	22	8
564075 80	44	28
564089 80	22	5
564095 80	20	3
564095 81	20	3
564100 80	22	5
564403 01	16	38
564403 01	42	8
564478 01	42	3
564478 01	16	6
564493 02	12	31
564773 02	12	25
564773 02	46	5
565217 01	16	7
565295 01	42	6
565295 01	16	17
565378 01	46	33
565378 01	12	7
566054 01	30	2
566441 01	34	19

Part No.	Page	Ref.
566614 01	34	20
566682 01	32	2
566687 80	32	4
566692 01	32	1
566788 05	44	11
566788 05	12	32
566788 15	42	22
566788 15	16	13
566788 21	12	24
566788 21	44	7
567008 80	34	11
567501 02	18	18
570142 01	28	1
571405 80	12	22
571453 02	14	14
571620 01	40	6
571622 01	40	7
571627 01	40	3
571628 01	40	1
571743 80	12	9
571743 80	46	34
572730 80	34	6
573035 02	12	13
574226 01	16	16
574618 01	38	1
574618 02	38	2
574618 80	36	1
574625 02	18	19
574626 82	36	2
574627 03	40	2
574954 01	40	5
574986 04	34	10
575055 80	34	4A
575055 81	34	4
575083 02	34	4B
575098 01	34	4C
575939	42	98
576173 01	42	29
576173 01	42	30
576173 01	16	9
576173 01	16	14
576279 01	42	28
576279 01	16	10
576798 80	16	31
576866 02	18	12
576884 02	16	21
576884 04	16	21
576932 01	16	37
576933 01	18	5
576938 01	16	36

Part No.	Page	Ref.
576938 02	16	35A
576938 03	16	34
576938 04	16	35B
576938 05	16	35C
576938 06	16	35D
576938 07	16	35E
576938 08	16	35F
576938 09	16	35G
576938 10	16	35H
576938 11	16	35I
576938 12	16	35J
576938 13	16	35K
576938 80	16	35
576987 02	16	28
576987 04	16	28
577024 81	18	1
577705 80	20	1
577802 01	24	4
577803 01	24	4
577972 01	34	21
578017 02	12	44A
578019 01	12	44B
578019 80	12	44
578117	44	99
578118	46	99
578119	42	99
578184 01	16	19
578220 80	16	20
578280 02	12	1A
578281 80	12	1
579323 02	16	12
580049 01	14	16
580051 02	14	5
581543 01	14	9
584048 80	14	3
585653 80	12	20
585810 01	34	22
588067	34	99
588069	34	99
588221 80	18	3
588222 01	18	22
589776 01	34	13
590994 02	42	97
591263 01	24	4
66169	24	5
66251	22	4
66251	44	26
66414	34	18
66414	42	20
70490	12	3

Part No.	Page	Ref.
74067	44	14
74067	12	42